Module: General electronics

Tutorial Worksheet No. 3: **Diodes**

Duration: 3 weeks

Exercises to do in class: Week1: 1, 2, 3 **Week2: 4,5** **Week3: 6,7**

Exercise 01

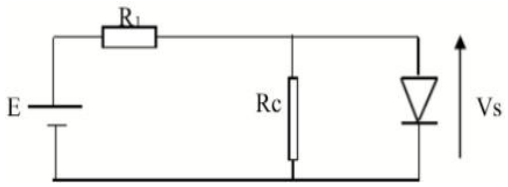

Calculate the output voltage (Vs) and the current supplied by the source using the ideal diode model, and then the real diode model (with threshold voltage and resistance).

Values: E_1 = 15 V, R_1 = 10Ω, R_C = 20Ω, V_d = 0.6 V and r_d=1Ω

Exercise 02

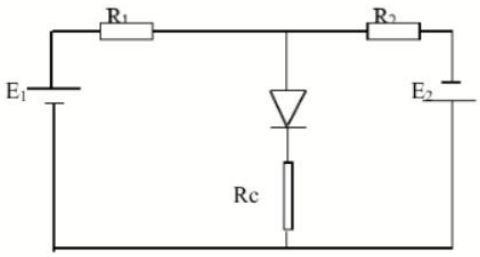

Study the following electrical circuit for the two cases below:

- 1st case: E_1 = 3V and E_2 = 4V

- 2nd case: E_1 = 15V and E_2 = 10V

Values: R_1 = R_2= r_d = 1Ω, R_C = 2Ω, V_d = 0.6V.

Calculate the voltage across R_C.

Exercise 03

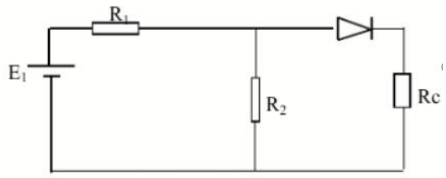

Use the ideal and real diode models to find the expression for the current supplied by the voltage source E.

Values: E = 10V, R_1 = 5kΩ, R2 = 5kΩ, R_C = 2kΩ, V_d = 0.6V, r_d=1Ω

Exercise 04

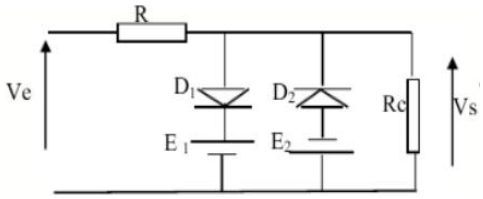

Plot the variation of the output voltage (V_s) as a function of the input voltage (V_e).

Data: Ve = 10 sin(ωt), R = 1kΩ, R_C = 100kΩ, E_1 = 8V, E_2 = 6V.

Exercise 05 (Diode Clipping Circuits)

Suppose the diodes of figures 1 and 2 perfect.

1) Draw approximately the output voltage (V_s). We give Vin_{max}=10V and its period is 50ms.
2) Now we suppose the diodes are real ones. What would be the form of the output then?
3) We add a voltage bias to the circuit of figure 2 (see figure 3). What would be the output in this case?

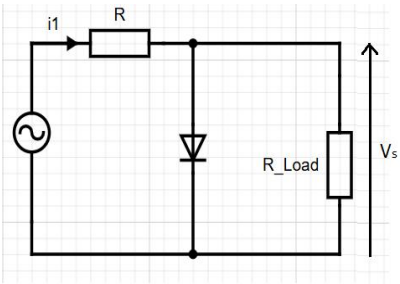

Figure 1

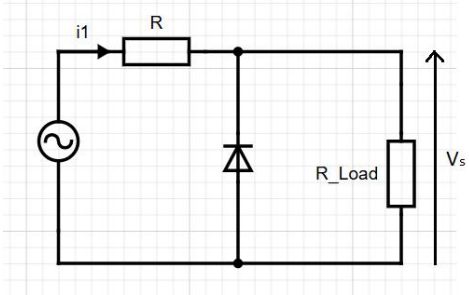

Figure 2

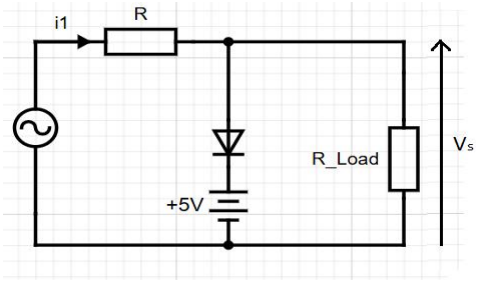

Figure 3

Exercise 06 (Diode Clamping Circuits)

Suppose the diodes of figures 4 and 5 perfect.

Draw approximately, for each circuit, the output voltage (V_s). We give Vin_{max}=10V and its period is 10ms.

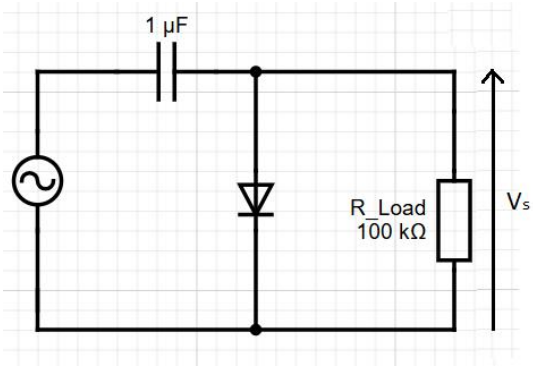

Figure 4

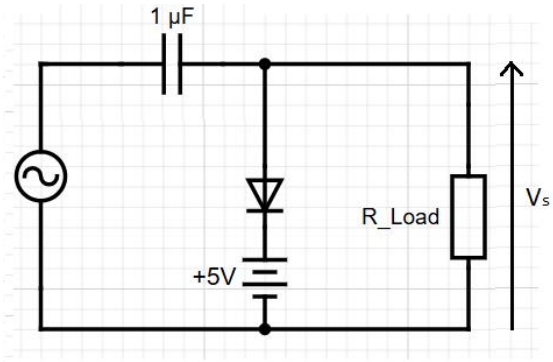

Figure 5

Exercise 07 (Voltage Doubler)

Suppose the diodes of figures 6 perfect.

Draw approximately, for each circuit, the output voltage (V_s). We give Vin_{max}=10V and its period is 10ms.

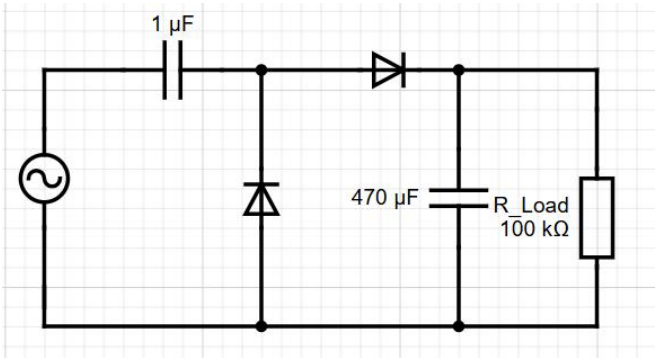

Figure 6